KOHLER. Faucets

Washing machine bib faucet, cold only, 26.0 lpm
K-13900IN-4

Features
- Lever handle
- For use with cold water line only
- 3.5 inch (89 mm) spout reach
- 6.9 gpm (26.0 lpm) maximum flow rate at 43.5 psi (3.0 bar)



Material
- Premium metal construction for durability and reliability
- KOHLER finishes resist corrosion and tarnishing

Installation
- G 1/2 (13 mm) inlet connection
- Wall-mount

Codes/Standards
None Applicable

KOHLER® India Faucet, Sanitaryware and Bathing Products Limited Warranty
See website for detailed warranty information.

Available Colors/Finishes
Color tiles intended for reference only.

Color	Code	Description
	CP	Polished Chrome

KOHLER. Faucets

Washing machine bib faucet, cold only, 26.0 lpm
K-13900IN-4

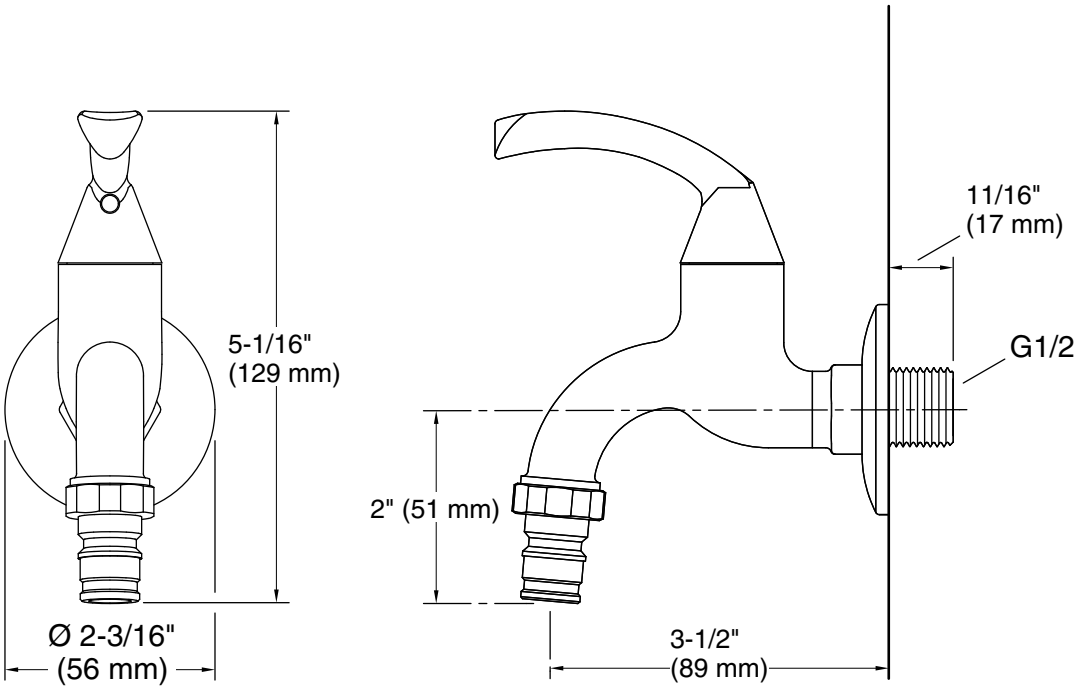

Technical Information
All product dimensions are nominal.

Spout:
Spout reach: 1-7/8" (48 mm)

Notes
Install this product according to the installation instructions.