Accent™
610 mm towel bar
K-25348IN

Features
- 610 mm (24 inch) single towel bar

Material
- Premium metal construction for durability and reliability
- KOHLER finishes resist corrosion and tarnishing

Installation
- Wall-mount
- Installation hardware included
- Includes hex wrench for installation



Codes/Standards
None Applicable

KOHLER® India Faucet Limited Warranty
See website for detailed warranty information.

Available Colors/Finishes
Color tiles intended for reference only.

Color	Code	Description
	AF	Vibrant® French Gold
	BV	Vibrant® Brushed Bronze
	BL	Matte Black
	RGD	Vibrant Rose Gold

Accent™
610 mm towel bar
K-25348IN

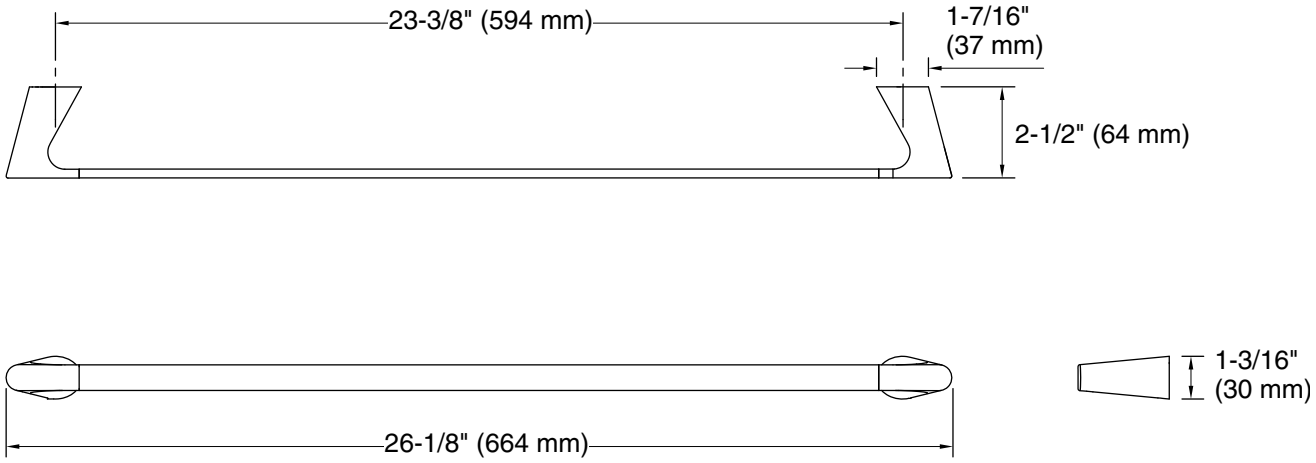

Technical Information
All product dimensions are nominal.

Material:	Brass

Notes
Install this product according to the installation instructions.