Accent™
Toilet brush and holder
K-25430IN

Material
- Premium material construction for durability and reliability
- KOHLER finishes resist corrosion and tarnishing
- Glass



Codes/Standards
None Applicable

KOHLER® India Faucet Limited Warranty
See website for detailed warranty information.

Available Colors/Finishes
Color tiles intended for reference only.

Color	Code	Description
	AF	Vibrant® French Gold
	BV	Vibrant® Brushed Bronze
	BL	Matte Black
	BRD	Vibrant Brushed Rose Gold
	RGD	Vibrant Rose Gold

Accent™

Toilet brush and holder

K-25430IN

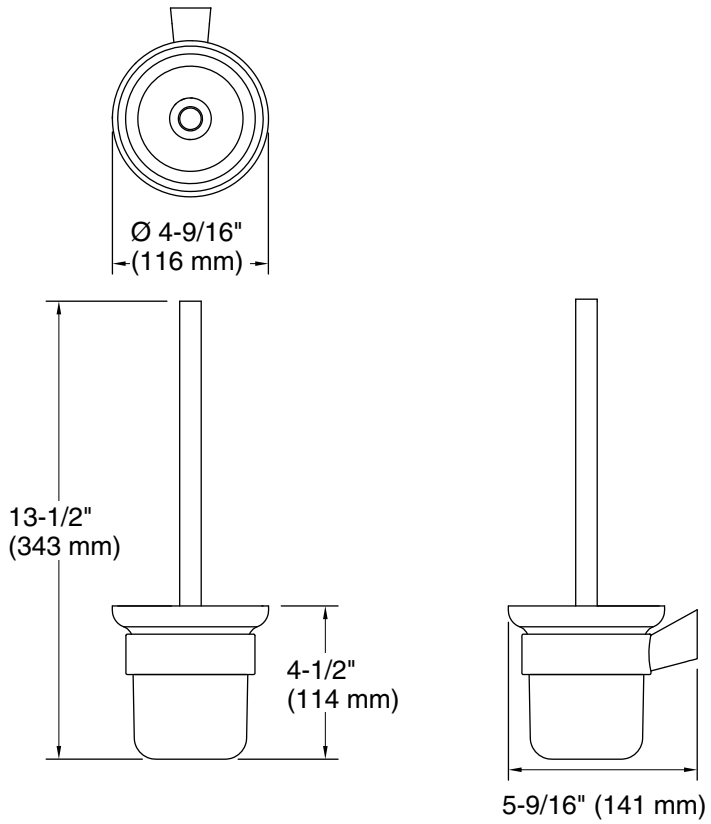

Technical Information

All product dimensions are nominal.

Material:	Brass, Zinc, Glass

Notes

Install this product according to the installation instructions.