APT™
Square Wall Hung Bowl W/O Seat
K-32427IN

Features
- Square-front bowl offers an ideal solution for smaller bathrooms and powder rooms
- Wall-hung design allows bowl to be set at preferred height
- Bowl can be mounted anywhere between 390 – 520 mm (15.35 – 20.5 inches) from floor to bowl rim, depending on in-wall tank used
- 2-9/16" (65 mm) fully glazed trapway
- Fully skirted trapway simplifies cleaning
- Ergonomic side pockets allow for easy installation while pocket covers maintain a cohesive aesthetic
- Flow regulator smooths water flow for splash control
- Coordinates with other products in the APT™ collection
- Bowl only; requires in-wall tank (K-26353IN-M, K-26353IN-P, K-26352IN-M, K-26352IN-P, or K-26351IN-M), outlet connector (K-1527926), flush valve (K-31538IN), M12 bolts (K-1213309), and dual-flush faceplate, each sold separately

Material
- Vitreous china

Installation
- Wall-hung
- Supply line sold separately

Recommended Products/Accessories
K-26352IN-P In-wall tank with frame
K-33679IN Brink™ Quiet-Close™ square-front toilet seat
K-32407IN APT™ Quiet-Close™ square-front toilet seat
1213309 M12 Rack Bolts

Included Components
1311148 No 6X30 Dowel Plug PVC Red (ANCHOR)
1311151 Screw-No.6XL38-PAN Philips-Wood-SS304
1549073 L1 Engine Flow Distributor Assembly
1549079 APT SQ WHB Pocket Cover Assembly
1549083 WHB Flow Reducer



Codes/Standards
None Applicable

KOHLER® India Faucet, Sanitaryware and Bathing Products Limited Warranty
See website for detailed warranty information.

Available Colors/Finishes
Color tiles intended for reference only.

Color	Code	Description
	0	White
	K4	Cashmere
	7	Black Black™

KOHLER®

APT™

Square Wall Hung Bowl W/O Seat

K-32427IN

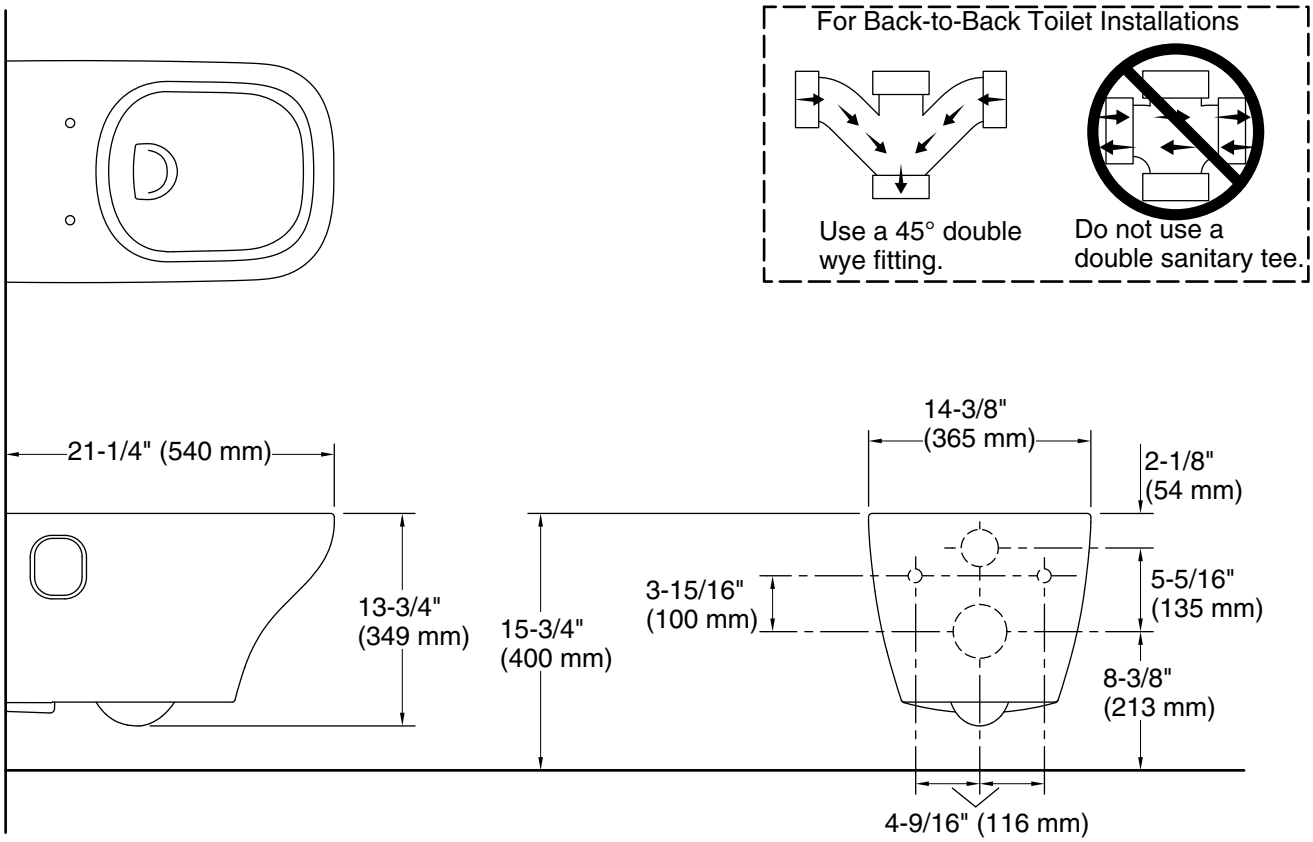

Technical Information

All product dimensions are nominal.

Toilet type:	Wall-hung
Waste Outlet:	Wall
Flush type:	Mechanical, Pneumatic, Tankless line pressure
Trap passageway:	2-9/16" (65 mm)
Water surface size:	5-1/8" x 4-1/16" (130 mm x 103 mm)
Rim to water surface:	8-3/4" (222 mm)

Notes

Install this product according to the installation instructions.