KOHLER. Faucets

Accliv™

Wall-mount single-handle bathroom sink faucet trim, cold only, 9.0 lpm

K-33103IN-4ND

Features

- Single Lever handle provides on/off activation and volume control
- 9.0 lpm (2.37 gpm) maximum flow rate at 3.1 bar (45 psi)
- 166 mm (6.50 inch) spout reach
- Part of the Accliv bathroom faucet and showering collection



Material

- Premium metal construction for durability and reliability
- KOHLER finishes resist corrosion and tarnishing

Installation

- Wall-mount
- Trim only; requires valve to complete installation (sold separately)

Required Products/Accessories

K-25149IN Single-handle wall-mount bathroom sink faucet valve, cold only

Recommended Products/Accessories

K-23726 Drain treatment

Codes/Standards

None Applicable

KOHLER® India Faucet Limited Warranty

See website for detailed warranty information.

Available Colors/Finishes

Color tiles intended for reference only.

Color	Code	Description
	CP	Polished Chrome
	AF	Vibrant® French Gold
	RGD	Vibrant Rose Gold

KOHLER. Faucets

Accliv™

Wall-mount single-handle bathroom sink faucet trim, cold only, 9.0 lpm

K-33103IN-4ND

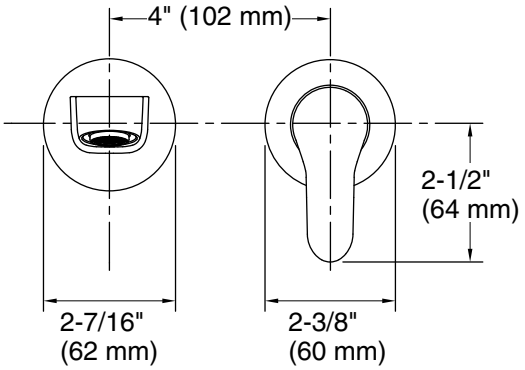

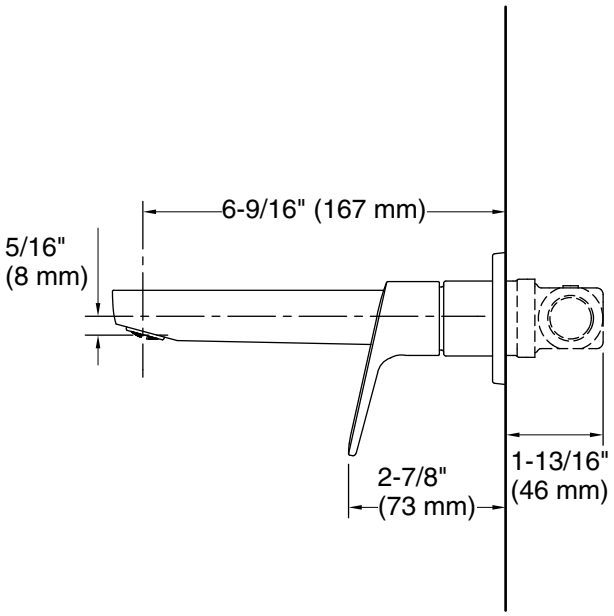

Technical Information

All product dimensions are nominal.

Spout:

Spout reach: 6-9/16" (166 mm)

Notes

Install this product according to the installation instructions.