KOHLER VIVE®

Quiet-Close™ Round PP Seat

K-33818IN

Features

- Quiet-Close™ rounded toilet seat
- Quick-Release™ functionality allows seat to be removed easily from toilet for convenient cleaning
- Grip-Tight bumpers hold seat firmly in place
- Color-matched plastic hinge
- Contoured seat for user comfort
- Grip-Tight installation hardware makes it easy to fasten the seat – everything is done from above the bowl
- Hinge is concealed by lid when closed to offer a clean profile



Material

- Plastic construction

Recommended Products/Accessories

K-28780IN Wall-hung round-front toilet with skirted trapway, dual-flush

Codes/Standards

None Applicable

KOHLER® India Faucet, Sanitaryware and Bathing Products Limited Warranty

See website for detailed warranty information.

Available Colors/Finishes

Color tiles intended for reference only.

Color	Code	Description
	0	White
	K4	Cashmere

KOHLER VIVE®

Quiet-Close™ Round PP Seat

K-33818IN

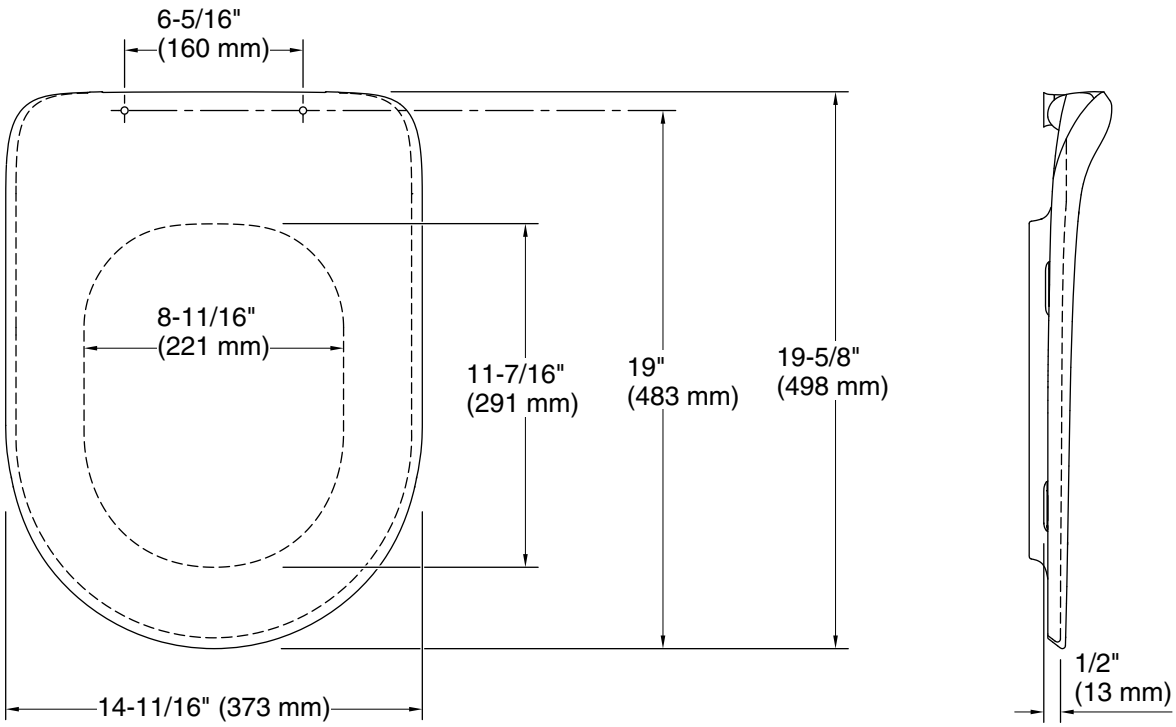

Technical Information

All product dimensions are nominal.

Seat shape type:	Round-front
Seat-mounting holes:	6-5/16" (160 mm)

Notes

Install this product according to the installation instructions.