KOHLER Faucets

APT™
Angle valve
K-33978IN-4

Features
- Contemporary design
- Single lever handle controls flow to outlet
- Coordinates with other products in the APT™ collection

Material
- Premium material construction for durability and reliability
- KOHLER finishes resist corrosion and tarnishing

Installation
- Wall-mount
- G 1/2 (13 mm) inlet connection



Codes/Standards
None Applicable

KOHLER® India Faucet Limited Warranty
See website for detailed warranty information.

Available Colors/Finishes
Color tiles intended for reference only.

Color	Code	Description
	CP	Polished Chrome

KOHLER. Faucets

APT™
Angle valve
K-33978IN-4

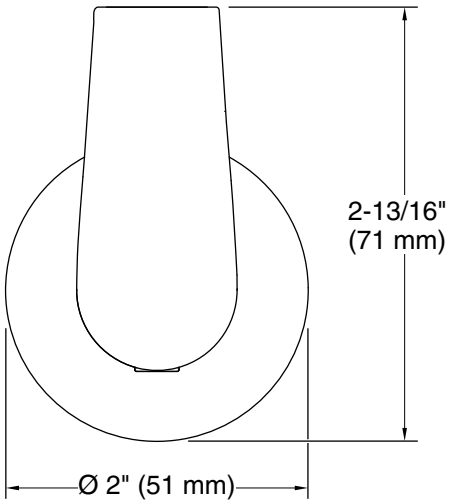

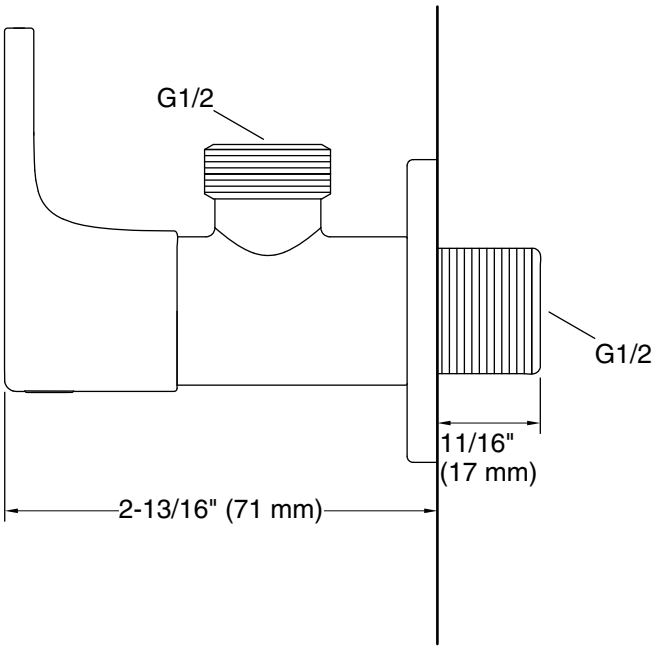

Technical Information
All product dimensions are nominal.

Notes
Install this product according to the installation instructions.