KOHLER. Faucets

Artifacts®

Pull-down kitchen sink faucet with three-function sprayhead

K-99259

Features

- Unique three-function pull-down sprayhead allows you to tackle kitchen tasks such as cleaning, rinsing, and filling with Sweep spray, BerrySoft spray and aerated stream
- BerrySoft® is a light spray ideal for washing hands, rinsing delicate dishware, and prepping fruits and vegetables
- KOHLER® ceramic disc valves exceed industry longevity standards for a lifetime of durable performance
- ProMotion® technology's light, quiet braided hose and swiveling ball joint make the pull-down sprayhead easier and more comfortable to use
- MasterClean™ sprayface features an easy-to-clean surface that withstands mineral buildup and maximizes spray performance
- High-arch 360˚ rotating swing spout offers vertical clearance for tall cookware and pitchers
- Single lever handle is simple to use and makes adjusting water temperature easy
- Temperature memory allows faucet to be turned on and off at the temperature set during prior usage
- 1.5 gpm (5.7 lpm) maximum flow rate at 60 psi (4.14 bar)
- DockNetik® secure docking system locks sprayhead into place when not in use

Material

- Premium metal construction for durability and reliability
- KOHLER finishes resist corrosion and tarnishing

Installation

- Single-hole installation (three-hole escutcheon sold separately)
- Flexible connections for easy installation

Optional Products/Accessories

K-99272 Three-Hole Kitchen Faucet Escutcheon
1012715 Kitchen Faucet Deep Rough-In Kit



ADA | **CSA B651**

Codes/Standards

ASME A112.18.1/CSA B125.1
NSF/ANSI/CAN 61
NSF/ANSI/CAN 372
DOE - Energy Policy Act 1992
California Energy Commission (CEC)
ADA
ICC/ANSI A117.1
CSA B651
NOM Standards
NOM 012-CONAGUA

KOHLER® Faucet Lifetime Limited Warranty

See website for detailed warranty information.

Available Colors/Finishes

Color tiles intended for reference only.

Color	Code	Description
	CP	Polished Chrome
	SN	Vibrant® Polished Nickel
	VS	Vibrant® Stainless
	BL	Matte Black
	2MB	Vibrant® Brushed Moderne Brass
	DR	Deep Bronze

KOHLER Faucets

Artifacts®

Pull-down kitchen sink faucet with three-function sprayhead

K-99259

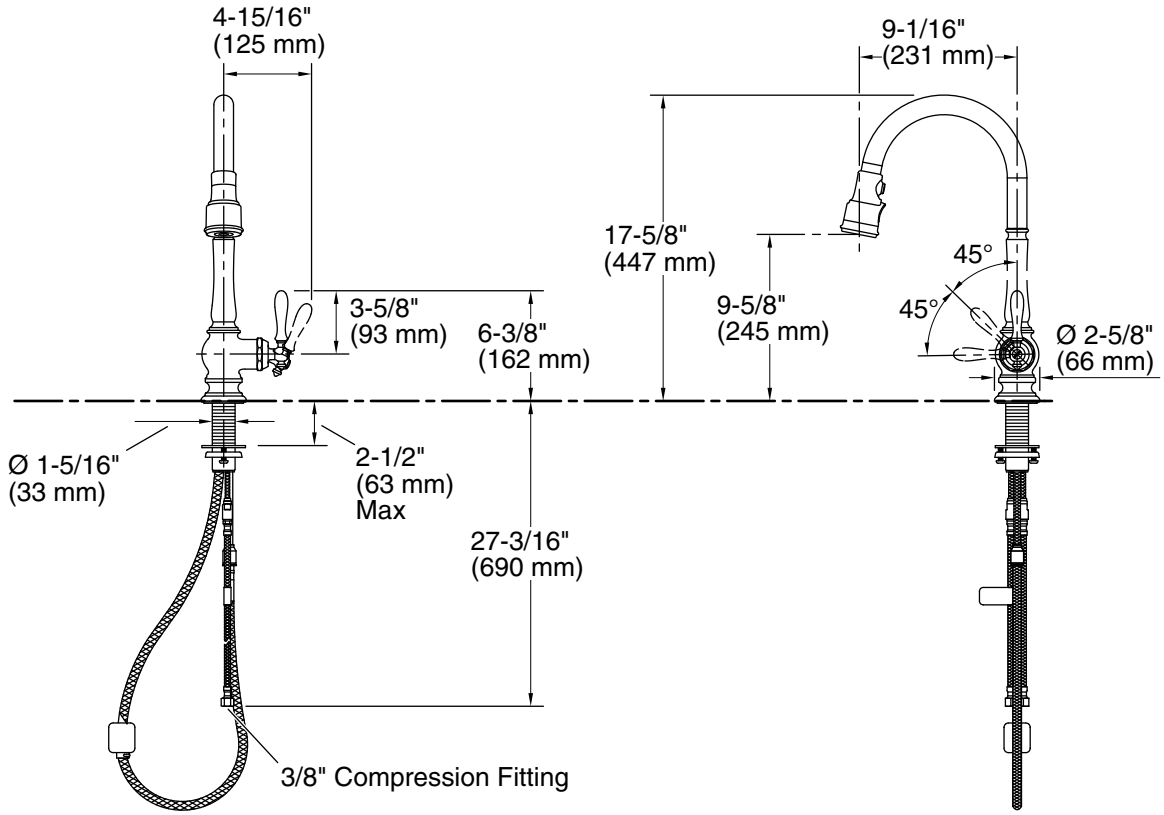

Technical Information

All product dimensions are nominal.

Faucet flow rate: 1.5 gal/min (5.7 l/min)

Spout:

Spout reach: 9-1/16" (231 mm)

Notes

Install this product according to the installation guide.

Meets all local plumbing codes for backflow prevention requirements.

ADA complaint for faucet handles only.

ADA compliant for faucet handles only

ADA, CSA B651 compliant when installed to the specific requirements of these regulations.