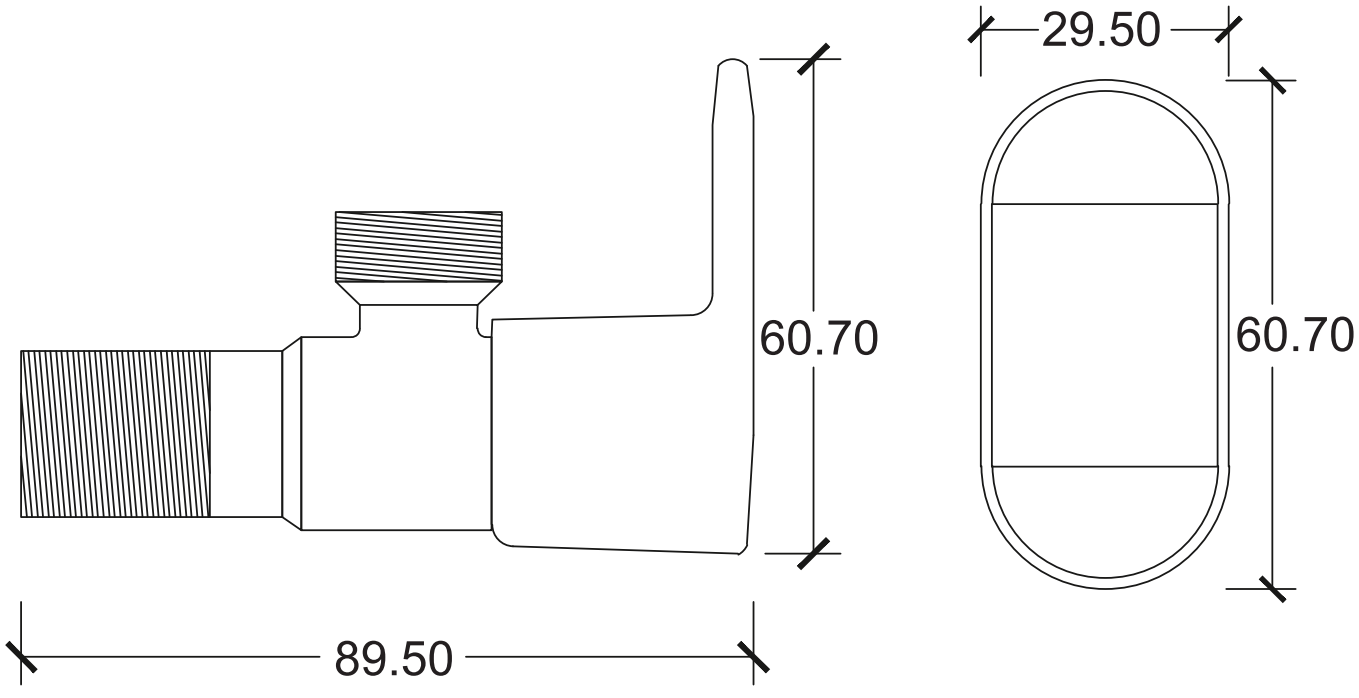
29.50
60.70
60.70
89.50